Blu-ray Disc™ (BD) PRINT SPECIFICATION

506: Silk-Screen Printing, Label 12cm, single sided

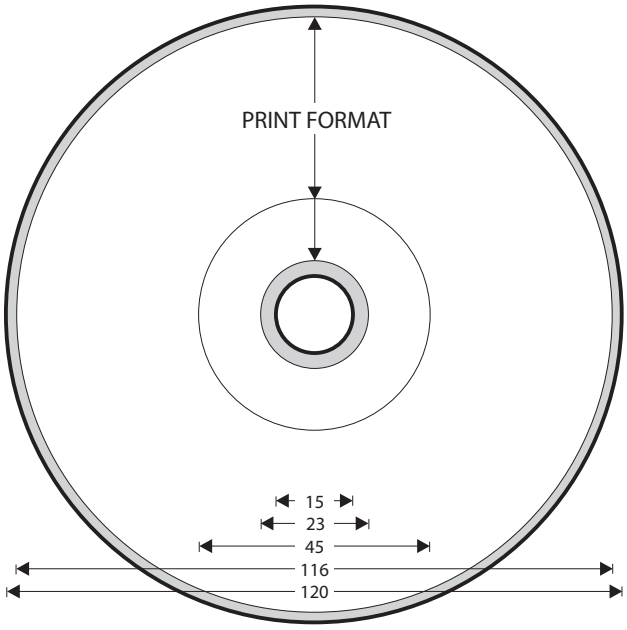

Print Format: Outside diameter: 116 mm
Inside diameter: 23 or 45 mm (the printing of a background color is recommended in order to avoid a double image occurring as a result of reflection)

Trapping: For image and line elements, trapping of approx. 0.15 mm is necessary to compensate for register tolerance.

Gradation: Smooth gradation is not possible with silk-screen printing (use dry offset).

Color Proofs: For standard color process printing (Picture Disc), a color proof (e.g. digital proof or cromalin) must be provided.

Films: All films must have a density of >3.0. They must be delivered positive, right reading and emulsion side up. Furthermore, they must contain the necessary markings (color identification and crosshair marks) and be free of bends, scratches and spots.

Colors: 1-6 colors (standard process colors / PANTONE special colors)
If a metallic effect in which reproduction of the image is not desired, a white background surface must be preprinted.

Printing Sequence: Special colors if desired, standard process colors Y, C, M, K.

Screen Count: 48 lines/cm (monocolor), tonal range approx. 15-85%.
48 lines/cm (for duplex, triplex and four-color C M Y K), tonal range approx. 10-90%

Dot Form: Elliptical dots

Screen Angles:

	Dominate Image Color (CMYK)		
	Black	Yellow+Magenta (Flesh tones & orange)	Yellow+Cyan (Green & turquoise)
C	75°	75°	45°
M	15°	45°	15°
Y	0°	0°	0°
K	45°	15°	75°

	Triplex, Duo-tone & 1c. (CMYK & PMS)		
	3 colors	2 color	1 color
Dark color	45°	45°	45°
Light color(s)	15°	75°	
	75°		

Text Sizes: Positive: min. 5 point (line weight min. 0.10mm)
Negative: min. 6 point (line weight min. 0.15mm)